Tyrone Rifle Team

Notes

© N.A./Dungannon/Tyrone/98

| Range | Target | Date |
|---|---|---|
| Rifle | Ammn | Event |
| Foresight | Rearsight | Previous Ranges |
| Time | Weather / Light | Agg |

Total **500**

| Sh | Elev. | WIND | | Call | Score |
|---|---|---|---|---|---|
| A | | | | | |
| B | | | | | |
| 1 | | | | | |
| 2 | | | | | |
| 3 | | | | | |
| 4 | | | | | |
| 5 | | | | | |
| 6 | | | | | |
| 7 | | | | | |
| 8 | | | | | |
| 9 | | | | | |
| 0 | | | | | |
| 1 | | | | | |
| 2 | | | | | |
| 3 | | | | | |
| 4 | | | | | |
| 5 | | | | | |

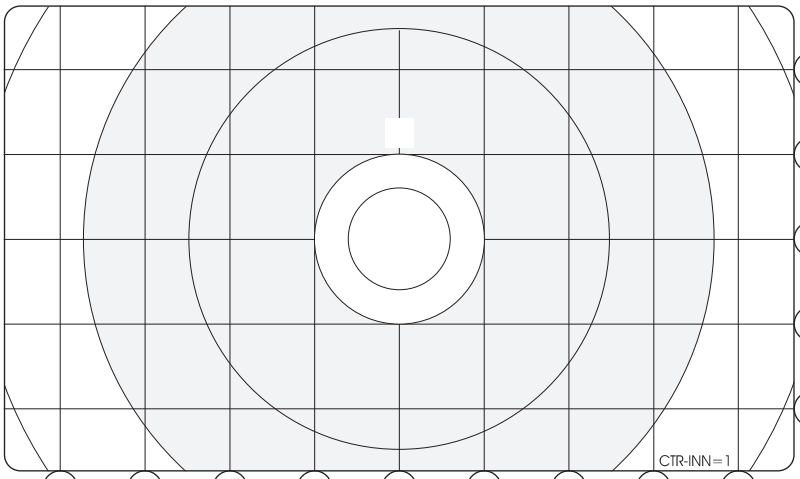


Lo

Hi

A B 1 2 3 4 5 6 7 8 9 0 1 2 3 4 5

R L

A B 1 2 3 4 5 6 7 8 9 0 1 2 3 4 5

| 0>1 1<0 < / > = Wind direction | | | |
|---|---|---|---|
| G | 1.25 | 1 | 0.5 |
| M | 2.5 | 2.25 | 1.25 |
| F | 3.5 | 3 | 1.75 |
| S | 5 | 4.5 | 2.5 |
| VS | 6.75 | 5.75 | 3.25 |

Tyrone Rifle Team

Notes

© N.A./Dungannon/Tyrone/98

| Range | Target | Date |
|---|---|---|
| Rifle | Ammn | Event |
| Foresight | Rearsight | Previous Ranges |
| Time | Weather / Light | Agg |

Total **500**

| Sh | Elev. | WIND | | Call | Score |
|---|---|---|---|---|---|
| A | | | | | |
| B | | | | | |
| 1 | | | | | |
| 2 | | | | | |
| 3 | | | | | |
| 4 | | | | | |
| 5 | | | | | |
| 6 | | | | | |
| 7 | | | | | |
| 8 | | | | | |
| 9 | | | | | |
| 0 | | | | | |
| 1 | | | | | |
| 2 | | | | | |
| 3 | | | | | |
| 4 | | | | | |
| 5 | | | | | |

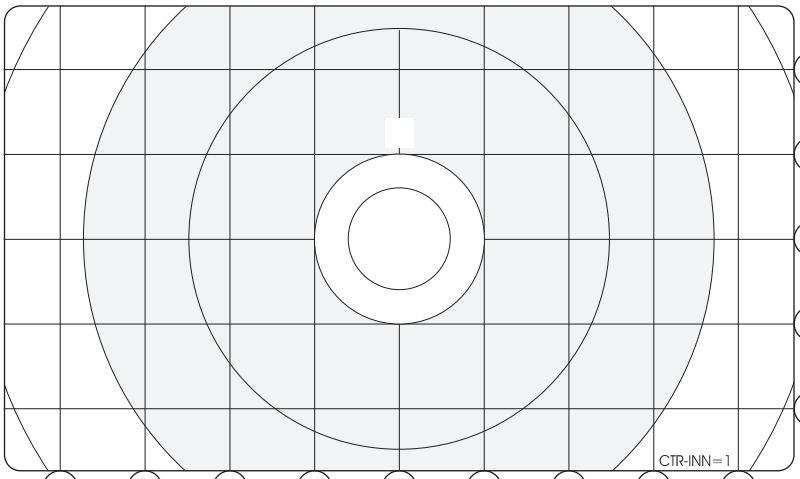


Lo

Hi

A B 1 2 3 4 5 6 7 8 9 0 1 2 3 4 5

R L

A B 1 2 3 4 5 6 7 8 9 0 1 2 3 4 5

| 0>1 1<0 < / > = Wind direction | | | |
|---|---|---|---|
| G | 1.25 | 1 | 0.5 |
| M | 2.5 | 2.25 | 1.25 |
| F | 3.5 | 3 | 1.75 |
| S | 5 | 4.5 | 2.5 |
| VS | 6.75 | 5.75 | 3.25 |